DWG. NO. BBLB-100D-NT | REV. -

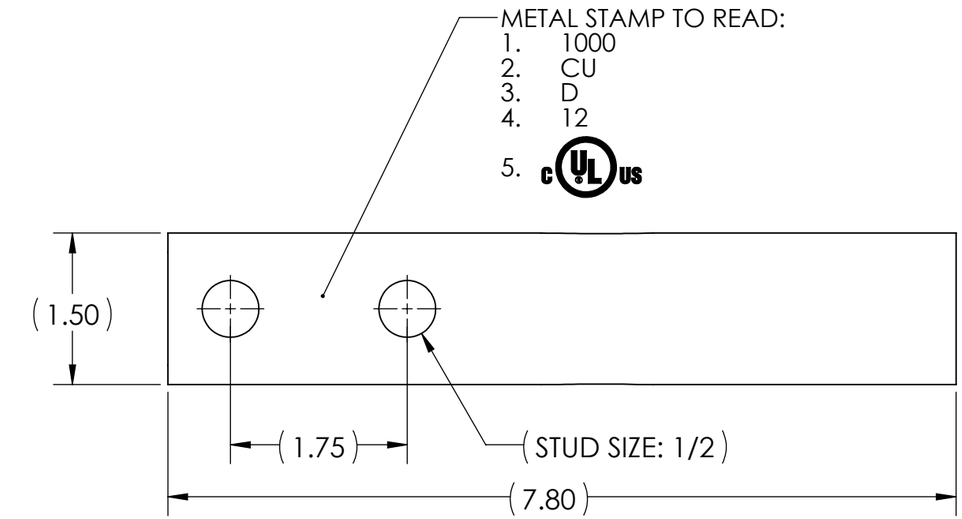

INK STAMP REFERENCE

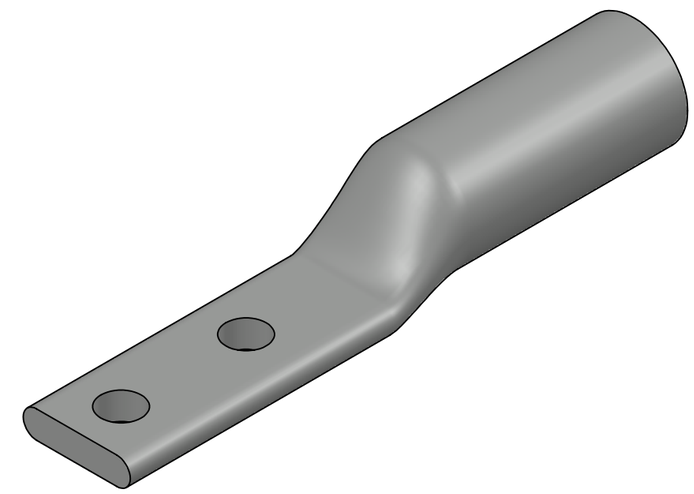

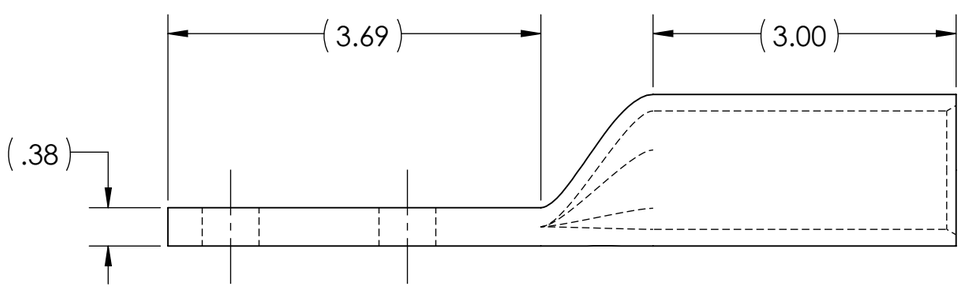

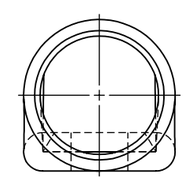

NOTES:
1. ALL DIMENSIONS IN INCHES UNLESS OTHERWISE SPECIFIED
2. SEE INSTALLATION SHEET FOR WIRE SIZE AND TOOLING RECOMMENDATIONS
3. TIN-PLATED TO INHIBIT CORROSION
4. RATED FOR COPPER CONDUCTORS ONLY
5. BEVELED ENTRY FOR EASY CABLE INSERTION
6. CONNECTORS ARE SUITABLE FOR VOLTAGES UP TO 35 KV
7. FOR APPLICATIONS GREATER THAN 2000 VOLTS, CONSULT CABLE MANUFACTURER FOR VOLTAGE STRESS RELIEF INSTRUCTIONS
8. CONNECTORS ARE cULus LISTED PER UL486A-B FOR POWER APPLICATIONS UP TO 90°C
9. CONNECTORS ARE DESIGNED FOR USE WITH CORRESPONDING BBLS SERIES LUGS
10. APPROXIMATE WEIGHT: 1.466 LB

RoHS COMPLIANT

NO.	ECN	DATE
REVISIONS		

QTY.			PT.	NAME OR DESCRIPTION
		X		COPPER TUBING
		BBLB-100-NT	CAT. NO.	BOTTOM STACKING LUG for 1000 MCM COPPER CONDUCTORS

REF. DWG'S: 2H52-56440 — H:\2H52\BBLB-100D-NT

PENNUNION™
229 WATERFORD STREET
EDINBORO, PA 16412 USA

DRAWN BY: DT — DATE: 8/8/2023 — CHK'D: QJB
SCALE: 2:3 — INTERPRET PER ASME Y14.5-2009 — FILE: 2H52
SIZE: B — DWG. NO. BBLB-100D-NT — REV. -

THIS DOCUMENT CONTAINS INFORMATION PROPRIETARY TO PENN-UNION CO. LLC. IT IS SUBMITTED IN CONFIDENCE AND IS TO BE USED SOLELY FOR THE PURPOSE FOR WHICH IT IS FURNISHED AND MUST BE RETURNED UPON REQUEST. THIS DOCUMENT AND SUCH INFORMATION IS NOT TO BE REPRODUCED, TRANSMITTED, DISCLOSED, OR USED OTHERWISE IN WHOLE OR IN PART WITHOUT THE EXPRESS CONSENT OF PENN-UNION CO. LLC.