DWG. NO. BBLU-4/0D-GND | REV. -

REV.	CAT. NO.	STUD HOLE	DIMENSIONS						APPROX. WEIGHT (LB)	STRIP LENGTH
			A	B	C	D	E	F		
01	BBLU-4/0D-GND	1/2	5.17	3.00	1.57	.14	1.00	1.75	0.212	1.69

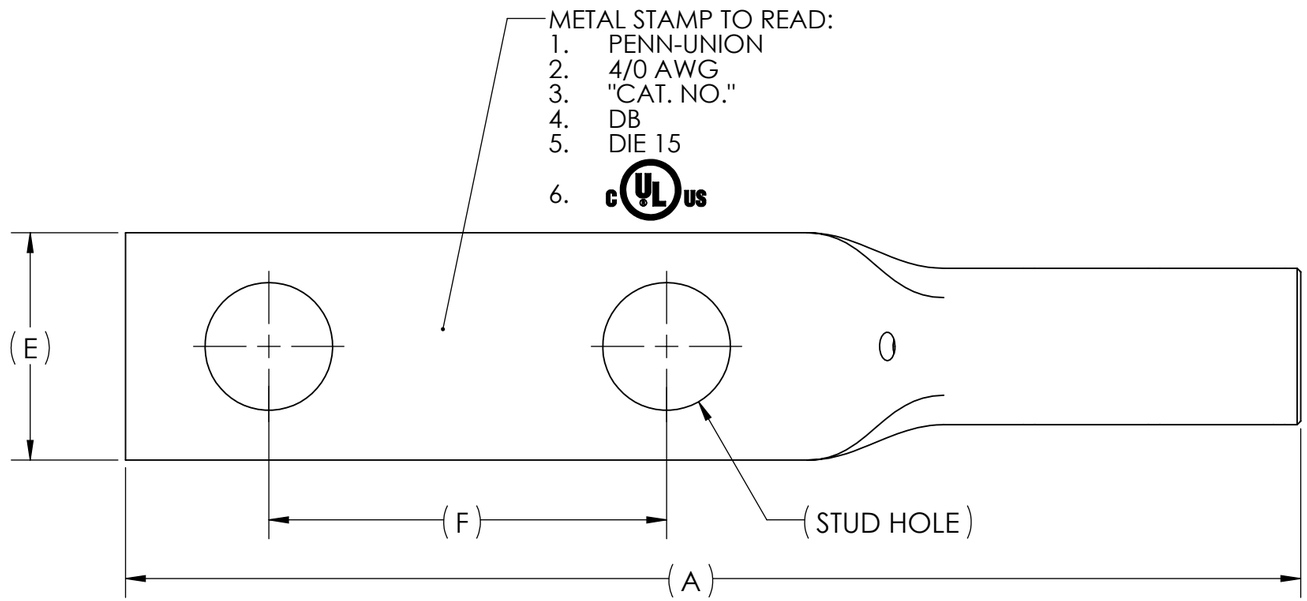

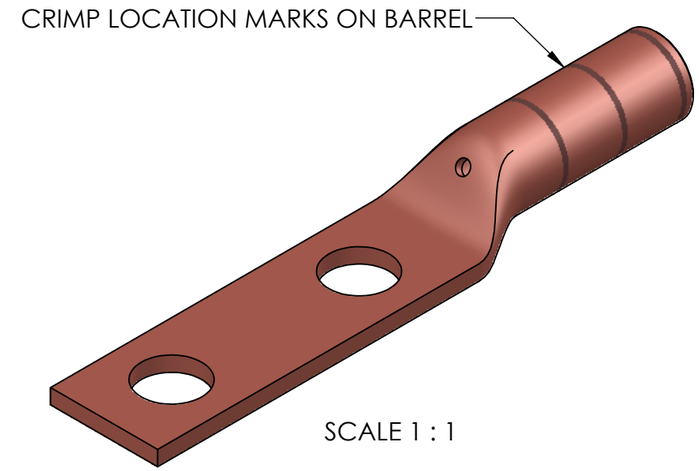

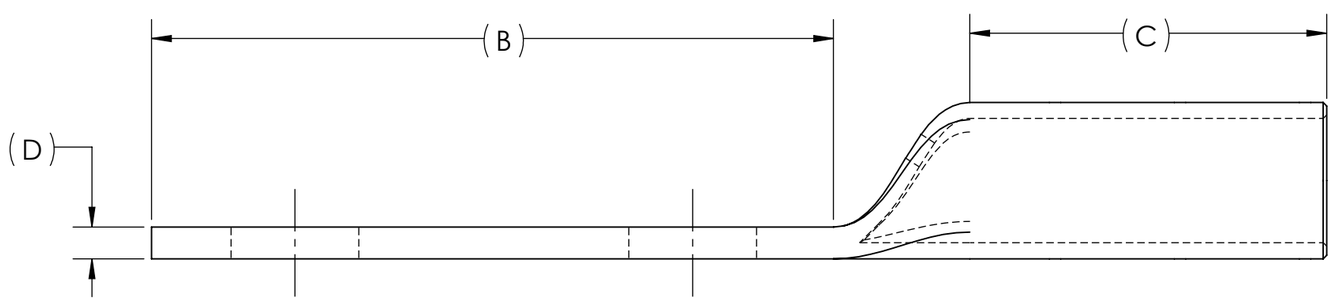

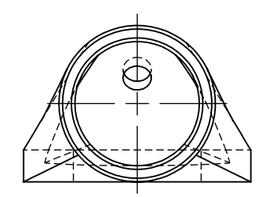

NOTES:
1. ALL DIMENSIONS IN INCHES UNLESS OTHERWISE SPECIFIED
2. SEE INSTALLATION SHEET FOR WIRE SIZE AND TOOLING RECOMMENDATIONS
3. RATED FOR COPPER CONDUCTORS ONLY
4. BEVELED ENTRY FOR EASY CABLE INSERTION
5. INSPECTION WINDOW TO ENSURE FULL CABLE INSERTION
6. PREFILLED WITH COPPER-BASED OXIDE INHIBITOR AND CAPPED TO PREVENT FOREIGN MATERIALS FROM ENTERING AND CONTAMINATING CONNECTORS PRIOR TO USE
7. CONNECTORS ARE SUITABLE FOR VOLTAGES UP TO 35 KV
8. FOR APPLICATIONS GREATER THAN 2000 VOLTS, CONSULT CABLE MANUFACTURER FOR VOLTAGE STRESS RELIEF INSTRUCTIONS
9. CONNECTORS ARE cULus LISTED PER UL486A-B FOR POWER APPLICATIONS UP TO 90°C
10. CONNECTORS ARE UL LISTED FOR GROUNDING, BONDING, AND DIRECT BURIAL APPLICATIONS PER UL467

NO.	ECN	DATE
REVISIONS		

QTY.	PT.	NAME OR DESCRIPTION
X		COPPER TUBING
SEE TABLE	CAT. NO.	

COMPRESSION GROUNDING LUG
for
4/0 STR. COPPER CONDUCTORS

REF. DWG'S: 5H08-96692 H:\5H08\BBLU-4.0D-GND

PENNUNION™
229 WATERFORD STREET
EDINBORO, PA 16412 USA

DRAWN BY: DT DATE: 8/17/2023 CHK'D: QJB
SCALE: 3:2 INTERPRET PER ASME Y14.5-2009 FILE: 5H08
SIZE: B DWG. NO. BBLU-4/0D-GND REV. -

THIS DOCUMENT CONTAINS INFORMATION PROPRIETARY TO PENN-UNION CO. LLC. IT IS SUBMITTED IN CONFIDENCE AND IS TO BE USED SOLELY FOR THE PURPOSE FOR WHICH IT IS FURNISHED AND MUST BE RETURNED UPON REQUEST. THIS DOCUMENT AND SUCH INFORMATION IS NOT TO BE REPRODUCED, TRANSMITTED, DISCLOSED, OR USED OTHERWISE IN WHOLE OR IN PART WITHOUT THE EXPRESS CONSENT OF PENN-UNION CO. LLC.