DWG. NO. BBLZ-3S | REV. -

REV.	CAT. NO.	SUFFIX	STUD HOLE	DIMENSIONS					APPROX. WEIGHT (LB)	STRIP LENGTH
				A	B	C	D	E		
-	BBLZ-3S3	S3	1/4	2.16	.75	1.13	.10	.53	0.032	1.25
-	BBLZ-3S1	S1	5/16	2.16	.75	1.13	.10	.53	0.031	1.25

USE BELOW OPTIONAL SUFFIXES FOR ALTERNATE LUG CONFIGURATIONS:
-45 FOR 45° BENT PAD
-90 FOR 90° BENT PAD
-FL FOR FLARED BARREL ENTRY
-U FOR UNDRILLED PAD
EXAMPLE: BBLZ-3S3-FL

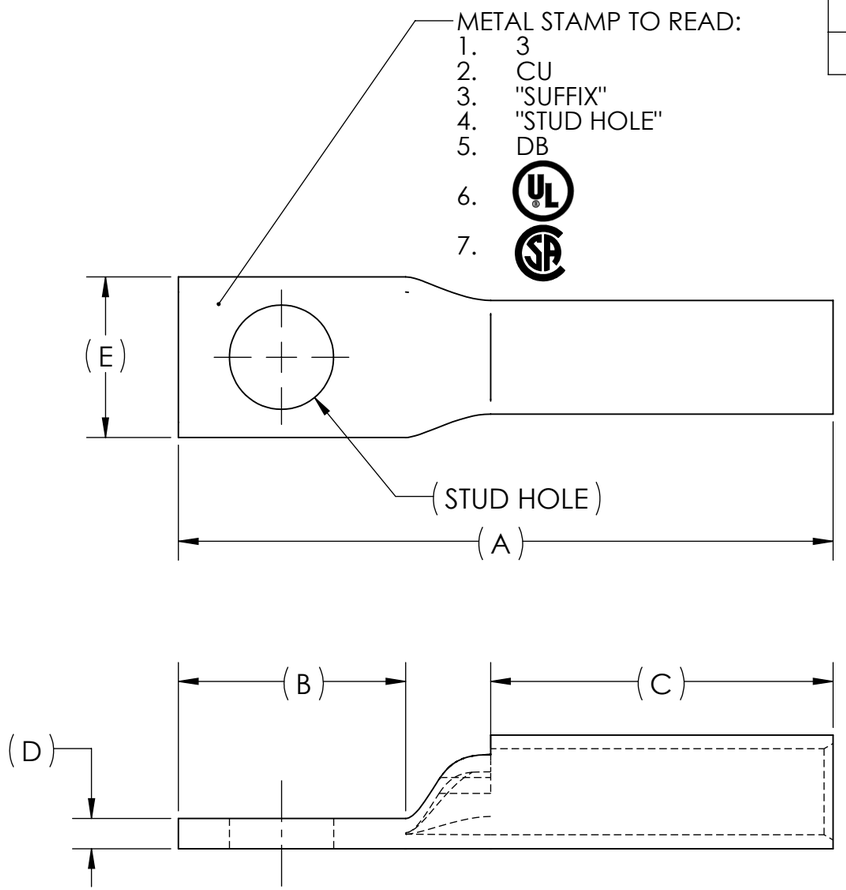

DIE COLOR RED
INK STAMP REFERENCE

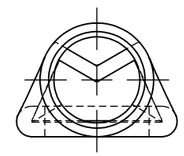

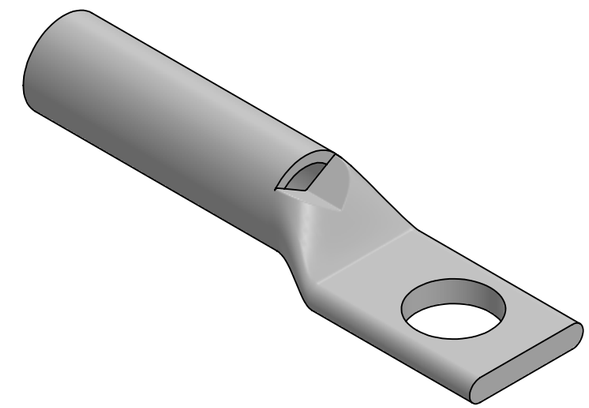

NOTES:
1. ALL DIMENSIONS IN INCHES UNLESS OTHERWISE SPECIFIED
2. SEE INSTALLATION SHEET FOR WIRE SIZE AND TOOLING RECOMMENDATIONS
3. TIN-PLATED TO INHIBIT CORROSION
4. RATED FOR COPPER CONDUCTORS ONLY
5. BEVELED ENTRY FOR EASY CABLE INSERTION
6. INSPECTION WINDOW TO ENSURE FULL CABLE INSERTION
7. CONNECTORS ARE SUITABLE FOR VOLTAGES UP TO 35 KV
8. FOR APPLICATIONS GREATER THAN 2000 VOLTS, CONSULT CABLE MANUFACTURER FOR VOLTAGE STRESS RELIEF INSTRUCTIONS
9. CONNECTORS ARE UL LISTED PER UL486A-B AND CSA CERTIFIED PER C22.2 NO.65 FOR POWER APPLICATIONS UP TO 90°C
10. CONNECTORS ARE UL LISTED FOR GROUNDING, BONDING, AND DIRECT BURIAL APPLICATIONS PER UL467
11. CONNECTORS ARE CSA CERTIFIED FOR GROUNDING, BONDING, AND DIRECT BURIAL APPLICATIONS PER C22.2 NO.41

RoHS COMPLIANT

NO.	ECN	DATE
REVISIONS		

QTY.	PT.	NAME OR DESCRIPTION
X		COPPER TUBING
SEE TABLE	CAT. NO.	PENN-CRIMP LUG for 3 AWG COPPER CONDUCTORS

REF. DWG'S: H:\2H02\BBLZ-3S

PENNUNION™
229 WATERFORD STREET
EDINBORO, PA 16412 USA

DRAWN BY: DT DATE: 5/23/2023 CHK'D: QJB
SCALE: 2:1 INTERPRET PER ASME Y14.5-2009 FILE: 2H02
SIZE: B DWG. NO. BBLZ-3S REV. -

THIS DOCUMENT CONTAINS INFORMATION PROPRIETARY TO PENN-UNION CO. LLC. IT IS SUBMITTED IN CONFIDENCE AND IS TO BE USED SOLELY FOR THE PURPOSE FOR WHICH IT IS FURNISHED AND MUST BE RETURNED UPON REQUEST. THIS DOCUMENT AND SUCH INFORMATION IS NOT TO BE REPRODUCED, TRANSMITTED, DISCLOSED, OR USED OTHERWISE IN WHOLE OR IN PART WITHOUT THE EXPRESS CONSENT OF PENN-UNION CO. LLC.