DWG. NO. BLUA-030S | REV. -

REV.	CAT. NO.	SUFFIX	STUD HOLE	DIMENSIONS					APPROX. WEIGHT (LB)	STRIP LENGTH
				A	B	C	D	E		
06	BLUA-030S2	S2	3/8	3.63	1.25	1.50	.36	1.39	0.534	1.63
08	BLUA-030S1	S1	1/2	3.88	1.56	1.50	.36	1.37	0.555	
05	BLUA-030S	S	5/8	3.66	1.47	1.50	.36	1.39	0.510	

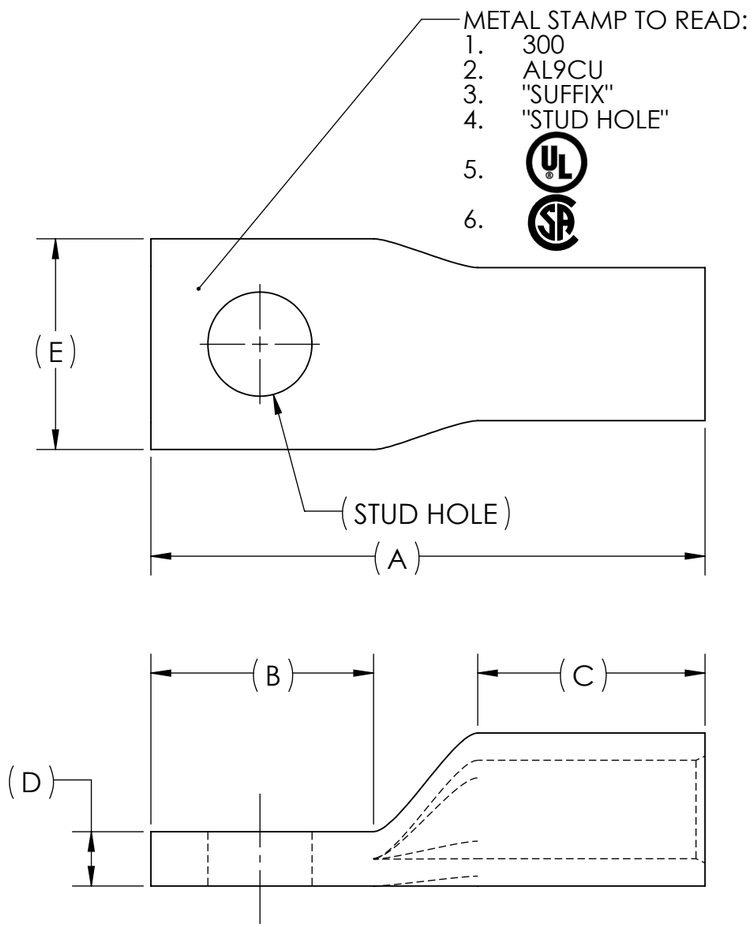

INK STAMP REFERENCE

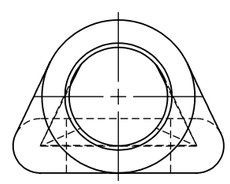

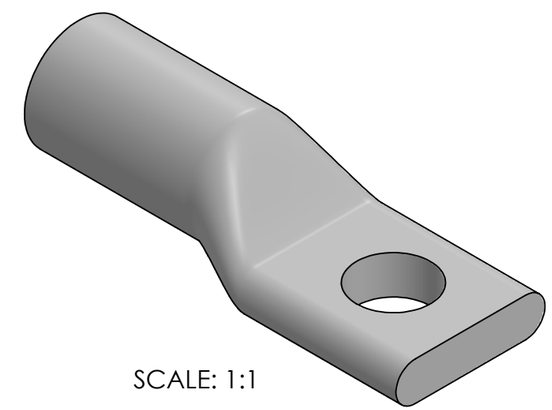

SCALE: 1:1

NOTES:
1. ALL DIMENSIONS IN INCHES UNLESS OTHERWISE SPECIFIED
2. SEE INSTALLATION SHEET FOR WIRE SIZE AND TOOLING RECOMMENDATIONS
3. TIN-PLATED AND FACTORY PREFILLED WITH OXIDE INHIBITOR
4. RATED FOR ALUMINUM AND COPPER CONDUCTORS UP TO 90°C
5. BEVELED ENTRY FOR EASY CABLE INSERTION
6. END CAPS PROVIDED TO PREVENT FOREIGN MATERIALS FROM ENTERING AND CONTAMINATING THE CONNECTOR PRIOR TO USE
7. CONNECTORS ARE SUITABLE FOR VOLTAGES UP TO 35 KV
8. FOR APPLICATIONS GREATER THAN 2000 VOLTS, CONSULT CABLE MANUFACTURER FOR VOLTAGE STRESS RELIEF INSTRUCTIONS
9. CONNECTORS ARE UL LISTED PER UL486A-B AND CSA CERTIFIED PER C22.2 NO.65 FOR POWER APPLICATIONS UP TO 90°C

RoHS COMPLIANT

NO.	ECN	DATE
REVISIONS		

QTY.	PT.	NAME OR DESCRIPTION
X		ALUMINUM TUBING
SEE TABLE	CAT. NO.	PENN-CRIMP LUG for 300 MCM ALUMINUM AND COPPER CONDUCTORS

REF. DWG'S: 4H29-45268, 4H29-45926, 4H29-34388 H:\4H29\BLUA-030S

PENNUNION™
229 WATERFORD STREET
EDINBORO, PA 16412 USA

DRAWN BY: DT DATE: 6/28/2023 CHK'D: QJB
SCALE: 1:1 INTERPRET PER ASME Y14.5-2009 FILE: 4H29
SIZE: B DWG. NO. BLUA-030S REV. -

THIS DOCUMENT CONTAINS INFORMATION PROPRIETARY TO PENN-UNION CO. LLC. IT IS SUBMITTED IN CONFIDENCE AND IS TO BE USED SOLELY FOR THE PURPOSE FOR WHICH IT IS FURNISHED AND MUST BE RETURNED UPON REQUEST. THIS DOCUMENT AND SUCH INFORMATION IS NOT TO BE REPRODUCED, TRANSMITTED, DISCLOSED, OR USED OTHERWISE IN WHOLE OR IN PART WITHOUT THE EXPRESS CONSENT OF PENN-UNION CO. LLC.