DWG. NO. PBS SERIES REV. -

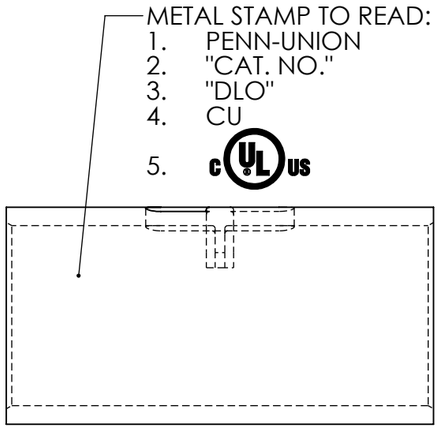

REV.	CAT. NO.	CONDUCTOR SIZE (DLO)	DIMENSIONS A	DIMENSIONS B	APPROX. WEIGHT (LB)	STRIP LENGTH	INSTALLATION TOOLING: PENN-UNION DIELESS TOOLING (NO. OF CRIMPS)	INSTALLATION TOOLING: AMP/TYCO DIE TOOLING (NO. OF CRIMPS)	INSTALLATION TOOLING: AMP CRIMP DIE
02	PBS-2	2 AWG (150/24)	1.03	.47	0.019	.63	TDH-1000 (1)	69099 (1)	46765-2
03	PBS-1/0	1/0 AWG (225/24 & 275/24)	1.25	.58	0.033	.75	TPU-6 (1) TPU-6FT (1) TDH-1000 (1)		46766-2
02	PBS-2/0	2/0 AWG (325/24 & 375/24)	1.35	.63	0.044	.75			46767-2
02	PBS-3/0	3/0 AWG (450/24)	1.41	.66	0.057	.81			46749-2
02	PBS-4/0	4/0 AWG (550/24)	1.53	.72	0.074	.88			46750-2
02	PBS-025	250 MCM (650/24)	1.75	.80	0.101	.94	TPU-6FT (1) TDH-1000 (1)		46751-2
02	PBS-030	300 MCM (775/24)	1.92	.88	0.115	1.00			46752-2
02	PBS-035	350 MCM (925/24)	2.00	.92	0.153	1.06			46753-2
02	PBS-040	400 MCM (1100/24)	2.13	.98	0.194	1.13		69082 (1)	46754-2
02	PBS-050	500 MCM (1325/24)	2.36	1.09	0.250	1.25			46755-2
02	PBS-060*	600 MCM (1600/24)	2.56	1.19	0.319	1.31		69082 (2)	46756-2
02	PBS-080*	800 MCM (1925/24)	2.86	1.34	0.481	1.50	TDH-1000 (1)		46758-2
02	PBS-100*	1000 MCM (2750/24)	3.25	1.48	0.662	1.62			46760-2

NOTE:
1. TPU-6 INCLUDES TPU-6H AND TPU-6B
2. TPU-6FT INCLUDES TPU-6FTH AND TPU-6FTB
3. TDH-1000 INCLUDES TDH-1000H AND TDH-1000B

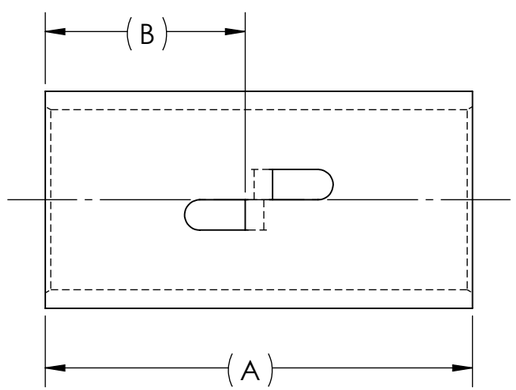

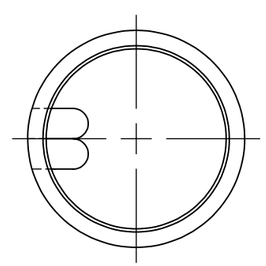

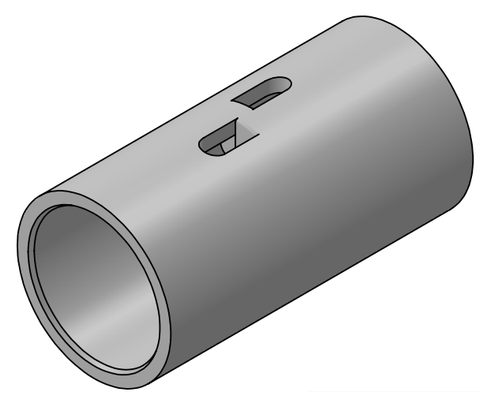

* CRIMP LOCATION MARKS STAMPED ON BARRELS OF PBS-60, PBS-80 AND PBS-100

NOTES:
1. ALL DIMENSIONS IN INCHES UNLESS OTHERWISE SPECIFIED
2. TIN-PLATED TO INHIBIT CORROSION
3. RATED FOR COPPER CONDUCTORS ONLY
4. BEVELED ENTRY FOR EASY CABLE INSERTION
5. INSPECTION WINDOW TO ENSURE FULL CABLE INSERTION
6. CONNECTORS ARE SUITABLE FOR VOLTAGES UP TO 35 KV
7. FOR APPLICATIONS GREATER THAN 2000 VOLTS, CONSULT CABLE MANUFACTURER FOR VOLTAGE STRESS RELIEF INSTRUCTIONS
8. CONNECTORS ARE cULus LISTED PER UL486A-B FOR POWER APPLICATIONS UP TO 90°C

RoHS COMPLIANT

NO.	ECN	DATE
REVISIONS		

QTY.	PT.	NAME OR DESCRIPTION
X		COPPER TUBING
SEE TABLE	CAT. NO.	POWER BUTT SPLICE for COPPER CONDUCTORS

REF. DWG'S: 5H82-96860-96873 H:\5H82\PBS_SERIES

PENNUNION™
229 WATERFORD STREET
EDINBORO, PA 16412 USA

DRAWN BY: DT DATE: 8/2/2023 CHK'D: QJB
SCALE: 2:1 INTERPRET PER ASME Y14.5-2009 FILE: 5H82
SIZE: B DWG. NO. PBS SERIES REV. -

THIS DOCUMENT CONTAINS INFORMATION PROPRIETARY TO PENN-UNION CO. LLC. IT IS SUBMITTED IN CONFIDENCE AND IS TO BE USED SOLELY FOR THE PURPOSE FOR WHICH IT IS FURNISHED AND MUST BE RETURNED UPON REQUEST. THIS DOCUMENT AND SUCH INFORMATION IS NOT TO BE REPRODUCED, TRANSMITTED, DISCLOSED, OR USED OTHERWISE IN WHOLE OR IN PART WITHOUT THE EXPRESS CONSENT OF PENN-UNION CO. LLC.